EVER FAST
ever-fast.com

EF-Plus 30

With a high thread profile and recessed thread root, EF-PLUS30 provides increased thread engagement with minimal stress on the boss.

- Direct assemly in plastics
- 30° Thread Profile allows thinner boss designs
- Lowers installation torque
- Minimizes boss failure
- Resists relaxation and vibration loosening
- Optimum non-reversibility

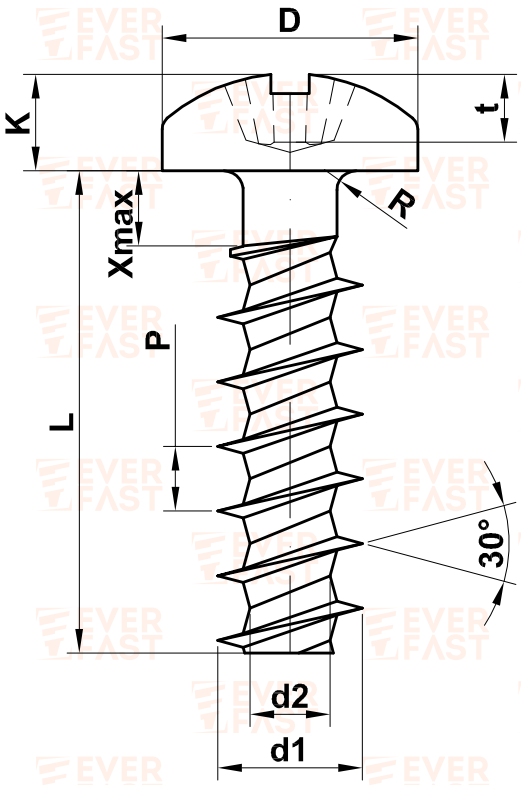

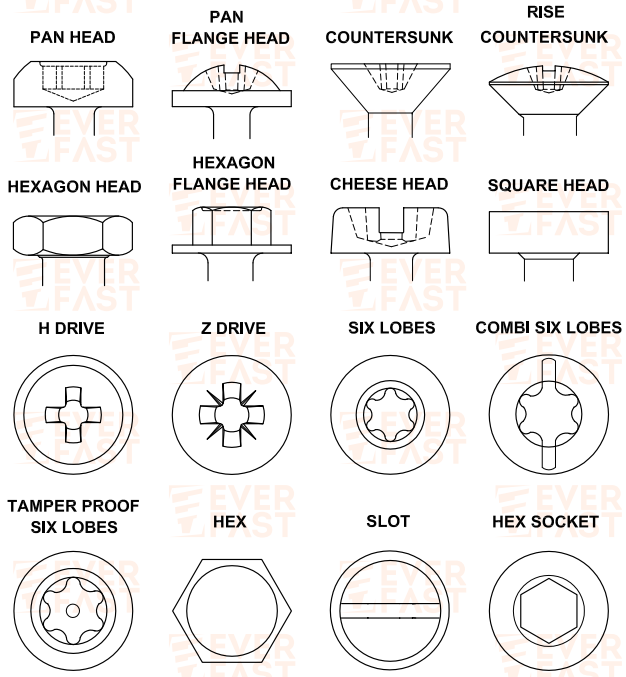

All the EverFast treatments are carried out in **full respect of the environment**, in compliance with the **RoHS and Reach standards**, and are **free of chromium (VI)**.

Surface treatments: white, yellow, black, iridescent high-strength zinc plating, zinc-nickel plating, zinc-iron plating, nickel plating, copper plating, tin plating, geomet coating, sealing, lubrication, dehydrogenation, self-locking, stainless steel polishing, blacking - burnishing.

Other treatments on request.